FT9.9LEP

mm (in)

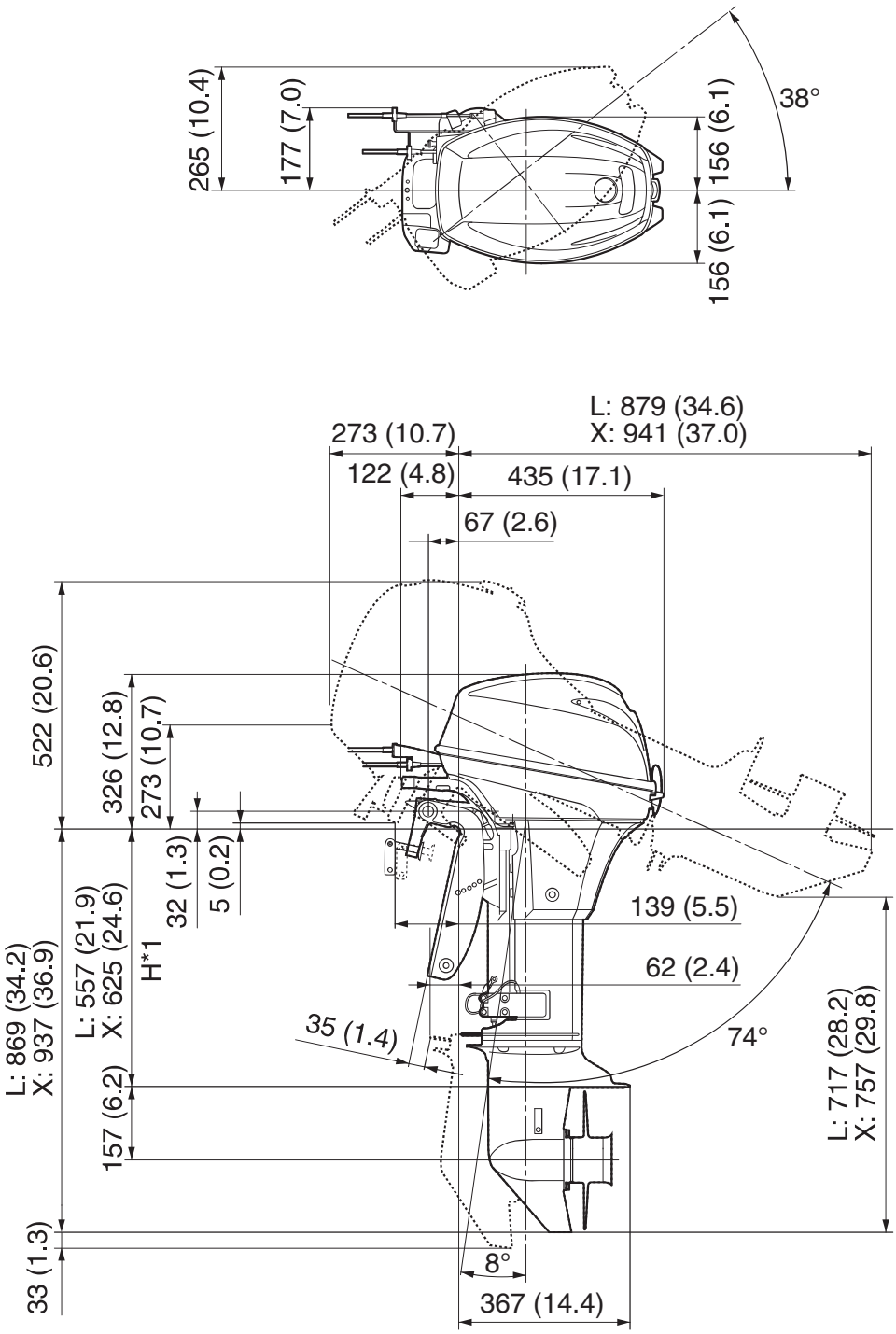

*1. Motor-Spiegelhöhe

FT9.9LEP

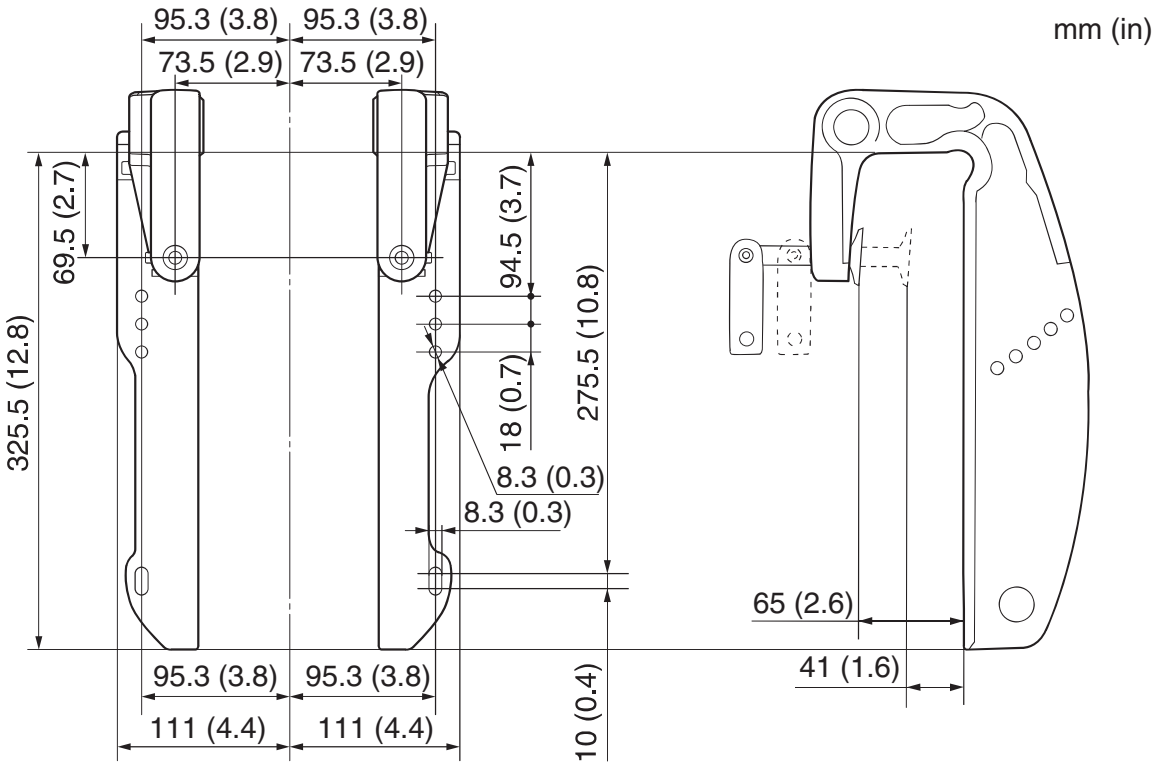
mm (in)
95.3 (3.8)
95.3 (3.8)
73.5 (2.9)
73.5 (2.9)
69.5 (2.7)
325.5 (12.8)
94.5 (3.7)
18 (0.7)
275.5 (10.8)
8.3 (0.3)
8.3 (0.3)
65 (2.6)
41 (1.6)
95.3 (3.8)
95.3 (3.8)
111 (4.4)
111 (4.4)
10 (0.4)